CENTRIFUGAL PUMPS

CLOSE-COUPLED DR SERIES

MENU

TABLE OF CONTENTS

Nomenclature **4**
Master Performance **5**
Materials of Construction **5**
DR Series 5
Performance **6**
DR1S-CP 6
DR1S-SP 7
DR1C-CP 8
DR1C-SS 9
DR1J-CS 10
DR2S-CS 11
DR2C-CS 12
DR2J-CS 13
Materials and Parts **14**
DR1S/DR2S - Square Flange 14
DR1J/DR2J - 56J Frame 15
DR1C/DR2C - 56C Frame 16
Motors **17**
Dimensions **18**
DR1S Square Flange 18
DR1C 56C Frame 19
DR1J 56J Frame 20
DR2S Square Flange 21
DR2C 56C Frame 22
DR2J 56J Frame 23
Pump End Kits **24**
56J Round Flange, Threaded Shaft 24
56C Round Flange, Keyed Shaft 24

CENTRIFUGAL PUMPS

CLOSE-COUPLED DR SERIES

MENU

NOMENCLATURE

DR 1 J 1 - C P - T

Blank = Single Phase, ODP
SE = Single Phase, TEFC
K = Pump End Kit (no motor)
T = Three Phase, ODP
TE = Three Phase, TEFC
T5 = Three Phase, 575V, ODP
TE5 = Three Phase, 575V, TEFC

P = Plastic Impeller
S = Stainless Steel Impeller

C = Cast Iron Volute & Seal Plate or Bracket
S = Stainless Steel Volute & Seal Plate

05 = 1/2 HP
07 = 3/4 HP
1 = 1 HP
15 = 1-1/2 HP
2 = 2 HP

S = 48Y Square Flange, Threaded 1/2"
J = 56J Round Flanged, Threaded 7/16"
C = 56C Round Flange, Keyed Shaft

1 = Volute Size 1-1/4" x 1"
2 = Volute Size 1-1/2" x 1-1/4"

DR = Pump Series

NOTE: Pump construction options may vary by pump series and motor configuration

Series	Volute	Impeller	Seal Type	Flow Range (GPM)	Head Range (ft)	HP Range	Suc. x Disch.
DR1S-CP	CI	PL	1	20 - 60	30 - 105	1/2 - 1	1.25" x 1.00"
DR1S-SP	SS	PL	1	20 - 60	33 - 110	1/2 - 1	1.25" x 1.00"
DR1C-CP	CI	PL	2	20 - 60	25 - 100	1/2 - 1	1.25" x 1.00"
DR1C-SS	SS	SS	2	20 - 60	22 - 107	1/2 - 1	1.25" x 1.00"
DR1J-CS	CI	SS	2	20 - 60	20 - 105	1/2 - 1	1.25" x 1.00"
DR2S-CS	CI	SS	1	30 - 90	25 - 127	1 - 2	1.50" x 1.25"
DR2C-CS	CI	SS	2	30 - 90	23 - 123	1 -2	1.50" x 1.25"
DR2J-CS	CI	SS	2	30 - 90	25 - 122	1 - 2	1.50" x 1.25"

CENTRIFUGAL PUMPS

CLOSE-COUPLED DR SERIES

MENU

MASTER PERFORMANCE

DR1 Series: 1-1/4" Suction x 1" Discharge

DR1, 1/2 HP	PEI	Volute	Impeller	Seal Type	Fluid Max °F	Motor	Capacity in GPM at Total Feet of Head Indicated										Max Press. (PSI)
							30	40	50	60	70	80	90	100	110	120	
DR1C05-SS	0.82	SS	SS	2	180	56C	56	50	43	36	27	-	-	-	-	-	37
DR1S05-SP	0.87	SS	PL	1	120	48Y	62	56	49	42	33	-	-	-	-	-	38
DR1S05-CP	0.90	CI	PL	1	120	48Y	59	53	46	39	29	-	-	-	-	-	37
DR1C05-CP	0.96	CI	PL	2	120	56C	57	51	43	34	26	-	-	-	-	-	37
DR1J05-CS	0.91	CI	SS	2	160	56J	54	48	42	35	26	-	-	-	-	-	37
DR1, 3/4 HP	PEI	Volute	Impeller	Seal Type	Fluid Max °F	Motor	Capacity in GPM at Total Feet of Head Indicated										Max Press. (PSI)
							30	40	50	60	70	80	90	100	110	120	
DR1C07-SS	0.82	SS	SS	2	180	56C	-	56	50	44	37	30	21	-	-	-	43
DR1S07-SP	0.87	SS	PL	1	120	48Y	-	61	55	49	42	34	24	-	-	-	43
DR1S07-CP	0.90	CI	PL	1	120	48Y	-	59	54	47	40	31	21	-	-	-	42
DR1C07-CP	0.96	CI	PL	2	120	56C	-	59	53	46	38	30	19	-	-	-	42
DR1J07-CS	0.91	CI	SS	2	160	56J	-	55	50	44	37	30	20	-	-	-	42
DR1, 1 HP	PEI	Volute	Impeller	Seal Type	Fluid Max °F	Motor	Capacity in GPM at Total Feet of Head Indicated										Max Pressure (PSI)
							30	40	50	60	70	80	90	100	110	120	
DR1C1-SS	0.82	SS	SS	2	180	56C	-	-	57	52	47	40	33	26	-	-	49
DR1S1-SP	0.87	SS	PL	1	120	48Y	-	-	60	56	50	44	37	29	-	-	50
DR1S1-CP	0.90	CI	PL	1	120	48Y	-	-	58	53	47	40	32	24	-	-	48
DR1C1-CP	0.96	CI	PL	2	120	56C	-	-	57	51	45	38	30	21	-	-	47
DR1J1-CS	1.00	CI	SS	2	160	56J	-	-	55	51	46	39	31	23	-	-	48

DR2 Series: 1-1/2" Suction x 1-1/4" Discharge

DR2, 1 HP	PEI	Volute	Impeller	Seal Type	Fluid Max °F	Motor	Capacity in GPM at Total Feet of Head Indicated										Max Press. (PSI)
							30	40	50	60	70	80	90	100	110	120	
DR2S1-CS	0.83	CI	SS	1	120	48Y	86	79	70	59	44	-	-	-	-	-	34
DR2C1-CS	0.90	CI	SS	2	180	56C	86	78	68	57	42	-	-	-	-	-	34
DR2J1-CS	0.93	CI	SS	2	160	56J	86	78	70	60	45	-	-	-	-	-	35
DR2, 1-1/2 HP	PEI	Volute	Impeller	Seal Type	Fluid Max °F	Motor	Capacity in GPM at Total Feet of Head Indicated										Max Press. (PSI)
							30	40	50	60	70	80	90	100	110	120	
DR2S15-CS	0.83	CI	SS	1	120	48Y	-	-	88	82	74	65	54	41	-	-	47
DR2C15-CS	0.90	CI	SS	2	180	56C	-	-	87	80	72	63	52	40	-	-	47
DR2J15-CS	0.93	CI	SS	2	160	56J	-	-	88	81	73	64	52	38	-	-	47
DR2, 2 HP	PEI	Volute	Impeller	Seal Type	Fluid Max °F	Motor	Capacity in GPM at Total Feet of Head Indicated										Max Press. (PSI)
							30	40	50	60	70	80	90	100	110	120	
DR2S2-CS	0.83	CI	SS	1	120	48Y	-	-	-	88	82	76	68	60	51	40	57
DR2C2-CS	0.90	CI	SS	2	180	56C	-	-	-	84	78	72	64	56	46	34	57
DR2J2-CS	0.93	CI	SS	2	160	56J	-	-	-	85	79	72	64	56	46	34	57

MATERIALS OF CONSTRUCTION

DR SERIES

Materials of Construction	Volute	Impeller	Seal Plate	Volute O-ring	Motor Bracket	Wear Ring	Shaft Seal	Shaft Coupling
DR1S-CP	Cast Iron, ASTM-A48, Class 30	PPE+PS 30% GF*	Cast Iron Class 25 ASTM A48	Nitrile	N/A	300 Series SS	PHEN/CER x BUNA-SS	N/A
DR1S-SP	303 Stainless Steel	PPE+PS 30% GF*	303 Stainless Steel	Nitrile	N/A	300 Series SS	PHEN/CER x BUNA-SS	N/A
DR2S-CS	Cast Iron, ASTM-A48, Class 30	304 Stainless Steel	Cast Iron Class 25 ASTM A48	Nitrile	N/A	300 Series SS	PHEN/CER x BUNA-SS	N/A
DR1J-CS	Cast Iron, ASTM-A48, Class 30	304 Stainless Steel	N/A	FKM	Cast Iron, ASTM-A48, Class 30	300 Series SS	SiC/SiC FKM-SS	N/A
DR2J-CS	Cast Iron, ASTM-A48, Class 30	304 Stainless Steel	N/A	FKM	Cast Iron, ASTM-A48, Class 30	300 Series SS	SiC/SiC FKM-SS	N/A
DR1C-SS	303 Stainless Steel	304 Stainless Steel	303 Stainless Steel	FKM	Cast Iron, ASTM-A48, Class 30	300 Series SS	GL-SiC/GL-SiC/FKM-SS	302 SS
DR1C-CP	Cast Iron, ASTM-A48, Class 30	*PPE+PS 30% GF	Cast Iron Class 25 ASTM A48	Nitrile	Cast Iron, ASTM-A48, Class 30	300 Series SS	PHEN/CER x BUNA-SS	303 SS
DR2C-CS	Cast Iron, ASTM-A48, Class 30	304 Stainless Steel	Cast Iron Class 25 ASTM A48	FKM	Cast Iron, ASTM-A48, Class 30	300 Series SS	GL-SiC/GL-SiC/FKM-SS	303 SS

** Polyphenylene Ether Polystyrene Modified*

Motor Confugurations		
DR1S & DR2S	48Y	Square Flange with 1/2" threaded SS shaft, impeller mounts directly on motor shaft
DR1C & DR2C	56C	Round flange - keyed shaft, impeller mounts to shaft coupling with 1/2" threads
DR1J & DR2J	56J	Round flange with 7/16" threaded shaft, impeller mounts directly on motor shaft

CENTRIFUGAL PUMPS

CLOSE-COUPLED DR SERIES

MENU

PERFORMANCE

DR1S-CP

PEI_{CL} Number
0.90

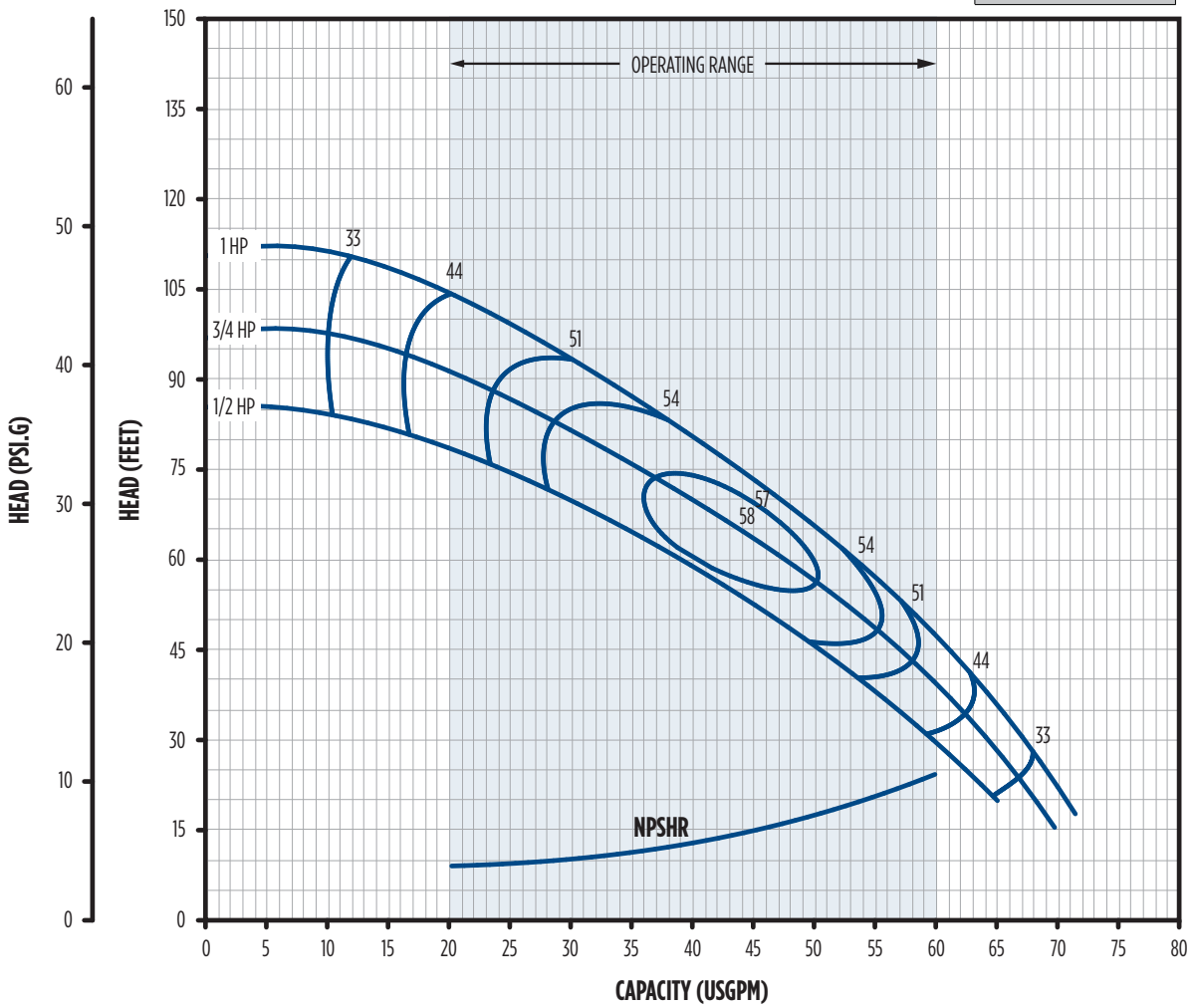

DR1S-CP	HP	PEI	Volute	Impeller	Seal Type	Fluid Max °F	Capacity in GPM at Total Feet of Head Indicated										Max (PSI)
							30	40	50	60	70	80	90	100	110	120	
DR1S05-CP	1/2	0.90	CI	PL	1	120	59.3	53.3	46.6	38.9	29.5	-	-	-	-	-	37.0
DR1S07-CP	3/4	0.90	CI	PL	1	120	63.9	58.9	53.5	47.5	40.6	32.3	20.9	-	-	-	42.0
DR1S1-CP	1	0.90	CI	PL	1	120		63.2	58.4	53.2	47.4	40.9	33.3	23.7	-	-	48.0

Enclosure	RPM	Phase	Voltage	HP	S.F.	S.F. Amps			Imp. Dia.	Order No.	Model No.	Wt. (lbs)
						115	230	460				
ODP	3600	1	115/230	1/2	1.90	12.4	6.1	-	4.70	97110005	DR1S05-CP	36
				3/4	1.65	14.8	7.3	-	5.00	97110007	DR1S07-CP	39
				1	1.65	19.9	9.9	-	5.36	97110010	DR1S1-CP	43
		3	230/460	1/2	1.90	-	3.1	1.4	4.70	97113005	DR1S05-CP-T	35
				3/4	1.65	-	3.6	1.7	5.00	97113007	DR1S07-CP-T	38
				1	1.65	-	4.7	2.3	5.36	97113010	DR1S1-CP-T	40

Volute	CI	Cast Iron, ASTM-A48, Class 30, 1-1/4" x 1"
Impeller	PL	Polyphenylene Ether Polystyrene Modified (PPE+PS 30%GF)
Mechanical Seal Types	1	Phenolic x Ceramic x Nitrile x SS
Motor Confugurations	48Y	Square Flange with 1/2" threaded SS shaft, impeller mounts directly on motor shaft

CENTRIFUGAL PUMPS

CLOSE-COUPLED DR SERIES

MENU

PERFORMANCE

DR1S-SP

PEI_{CL} Number
0.87

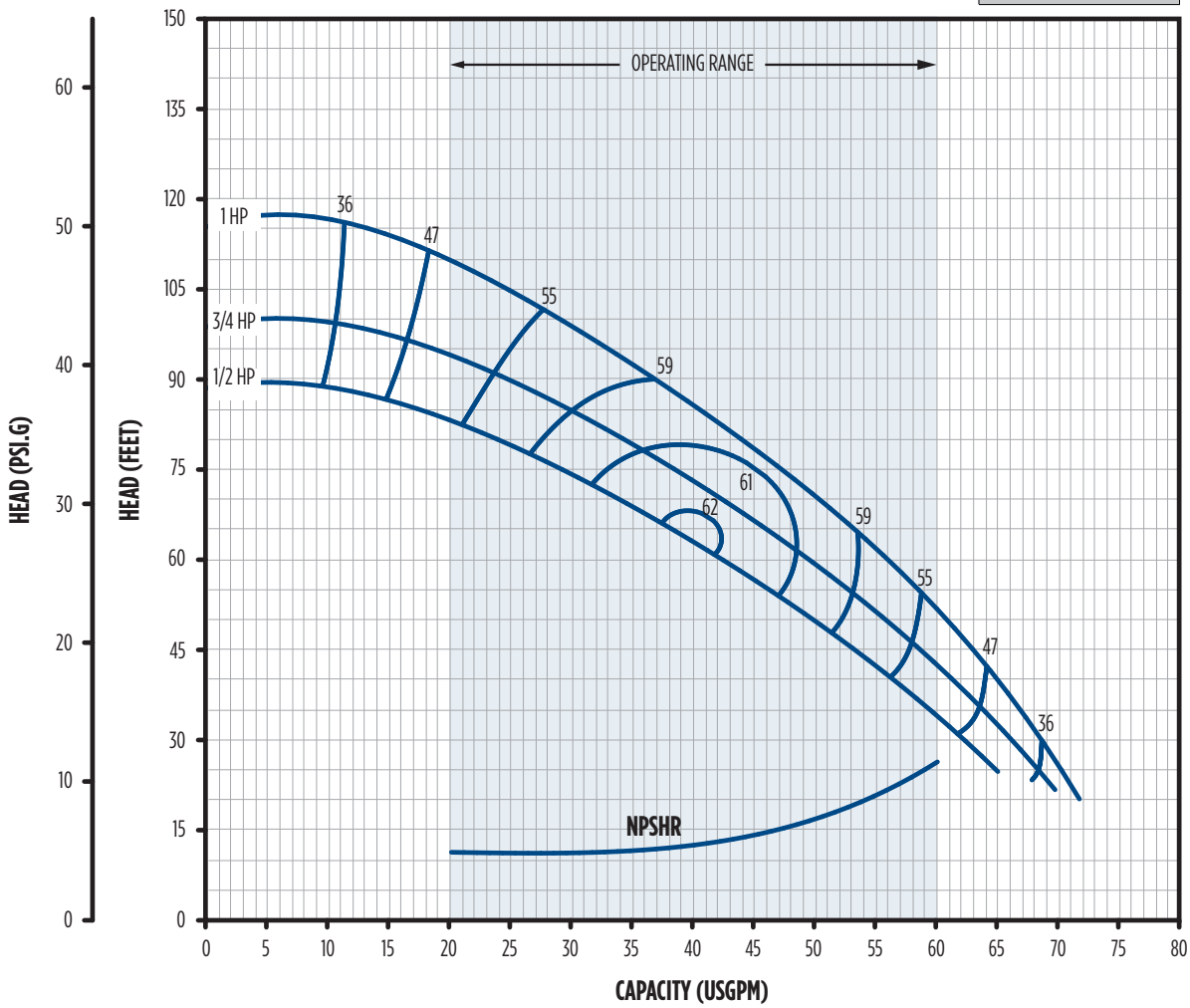

DR1S-SP	HP	PEI	Volute	Impeller	Seal Type	Fluid Max °F	Capacity in GPM at Total Feet of Head Indicated										Max (PSI)
							30	40	50	60	70	80	90	100	110	120	
DR1S05-SP	1/2	0.87	SS	PL	1	120	61.4	55.9	49.7	42.7	34.5	-	-	-	-	-	38.4
DR1S07-SP	3/4	0.87	SS	PL	1	120	65.7	60.6	55.2	49.1	42.2	33.9	23.0		-	-	42.8
DR1S1-SP	1	0.87	SS	PL	1	120		65.4	60.6	55.4	49.8	43.7	36.9	28.9	-	-	50.1

Enclosure	RPM	Phase	Voltage	HP	S.F.	S.F. Amps			Imp. Dia.	Order No.	Model No.	Wt. (lbs)
						115	230	460				
ODP	3600	1	115/230	1/2	1.90	12.4	6.1	-	4.70	97110105	DR1S05-SP	35
				3/4	1.65	14.8	7.3	-	5.00	97110107	DR1S07-SP	38
				1	1.65	19.9	9.9	-	5.36	97110110	DR1S1-SP	42
		3	230/460	1/2	1.90	-	3.1	1.4	4.70	97113105	DR1S05-SP-T	34
				3/4	1.65	-	3.6	1.7	5.00	97113107	DR1S07-SP-T	37
				1	1.65	-	4.7	2.3	5.36	97113110	DR1S1-SP-T	39

Volute	SS	Stainless steel, 1-1/4" x 1"
Impeller	PL	Polyphenylene Ether Polystyrene Modified (PPE+PS 30%GF)
Mechanical Seal Types	1	Phenolic x Ceramic x Nitrile x SS
Motor Confugurations	48Y	Square Flange with 1/2" threaded SS shaft, impeller mounts directly on motor shaft

CENTRIFUGAL PUMPS

CLOSE-COUPLED DR SERIES

MENU

PERFORMANCE

DR1C-CP

PEI_{CL} Number
0.96

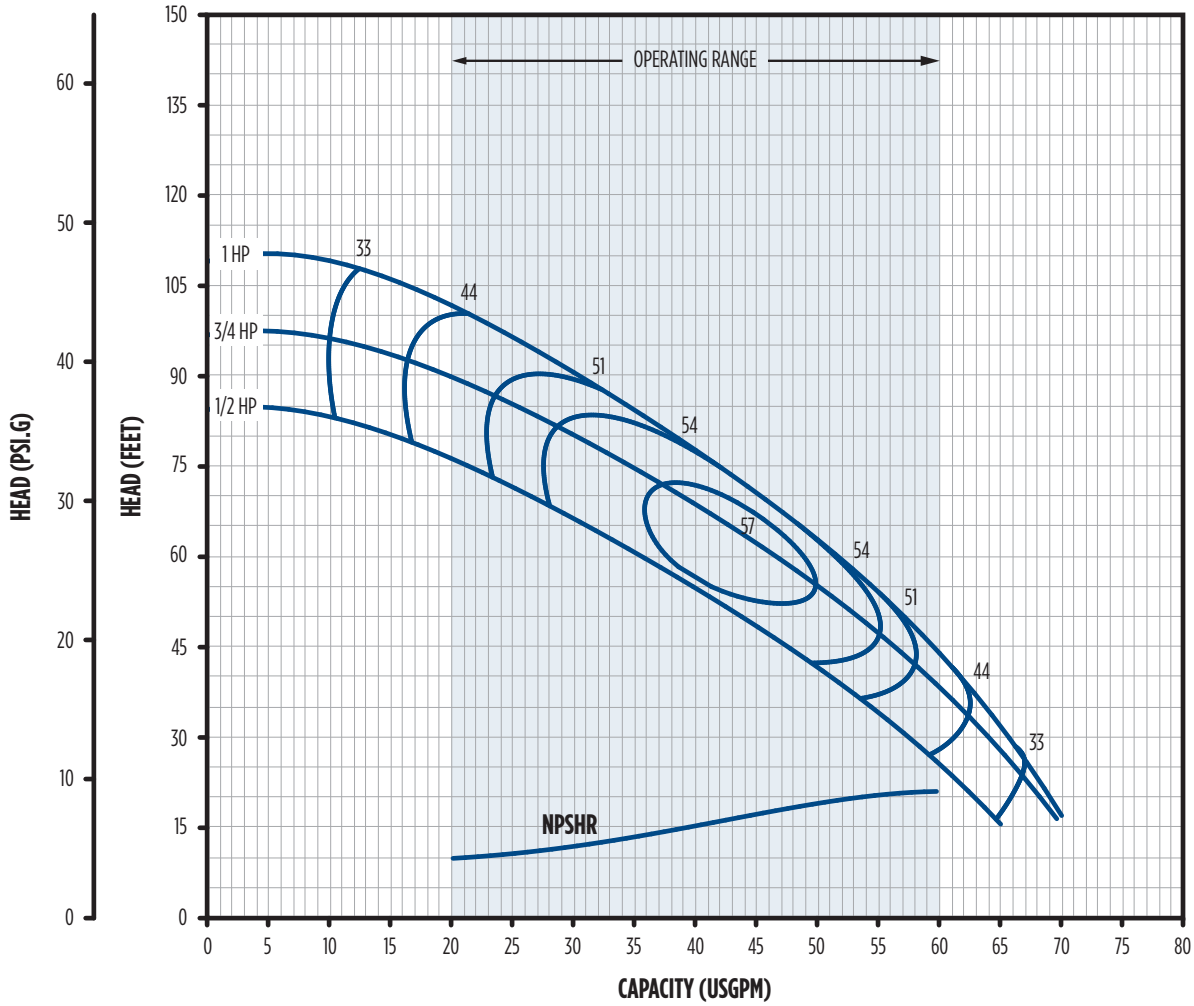

DR1C-CP	HP	PEI	Volute	Impeller	Seal Type	Fluid Max °F	Capacity in GPM at Total Feet of Head Indicated										Max (PSI)
							30	40	50	60	70	80	90	100	110	120	
DR1C05-CP	1/2	0.96	CI	PL	2	120	57.1	51.0	44.1	36.2	26.5	-	-	-	-	-	36.6
DR1C07-CP	3/4	0.96	CI	PL	2	120	63.7	58.5	52.9	46.6	39.4	30.8	18.9	-	-	-	42.0
DR1C1-CP	1	0.96	CI	PL	2	120	-	62.1	56.9	51.3	45.2	38.4	30.7	21.4	-	-	47.3

Enclosure	RPM	Phase	Voltage	HP	S.F.	S.F. Amps			Imp. Dia.	Order No.	Model No.	Wt. (lbs)
						115	230	460				
ODP	3600	1	115/230	1/2	1.60	11.8	5.9	-	4.70	97150005	DR1C05-CP	43
				3/4	1.50	14.8	7.4	-	5.00	97150007	DR1C07-CP	45
				1	1.40	16.8	8.4	-	5.36	97150010	DR1C1-CP	49

Volute	CI	Cast Iron, ASTM-A48, Class 30, 1-1/4" x 1"
Impeller	PL	Polyphenylene Ether Polystyrene Modified (PPE+PS 30%GF)
Mechanical Seal Types	2	GL-SiC x GL-SiC x FKM x SS
Motor Confugurations	56C	Round flange - keyed shaft, impeller mounts to shaft coupling with 1/2" threads

CENTRIFUGAL PUMPS

CLOSE-COUPLED DR SERIES

MENU

PERFORMANCE

DR1C-SS

PEI_{CL} Number
0.82

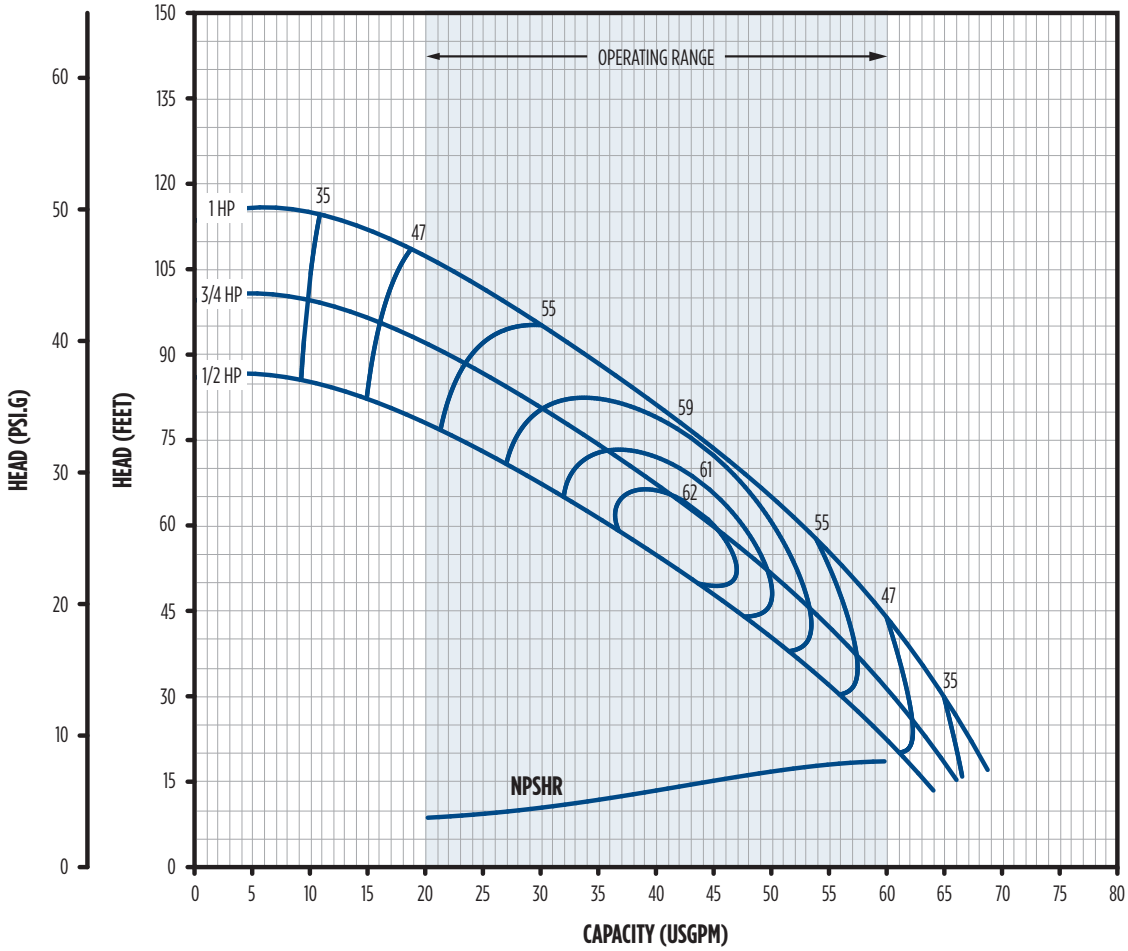

DR1C-SS	HP	PEI	Volute	Impeller	Seal Type	Fluid Max °F	Capacity in GPM at Total Feet of Head Indicated										Max (PSI)
							30	40	50	60	70	80	90	100	110	120	
DR1C05-SS	1/2	0.82	SS	SS	2	180	55.8	50.1	43.8	36.7	28.0	-	-	-	-	-	37.3
DR1C07-SS	3/4	0.82	SS	SS	2	180	60.9	55.9	50.6	44.7	38.2	30.8	21.9		-	-	43.2
DR1C1-SS	1	0.82	SS	SS	2	180	-	61.8	57.2	52.2	46.8	40.9	34.3	26.5	-	-	49.2

Enclosure	RPM	Phase	Voltage	HP	S.F.	S.F. Amps				Imp. Dia.	Order No.	Model No.	Wt. (lbs)
						115	230	460	575				
ODP	3600	1	115/230	1/2	1.60	11.8	5.9	-	-	4.70	97150305	DR1C05-SS	43
				3/4	1.50	14.8	7.4	-	-	5.00	97150307	DR1C07-SS	45
				1	1.40	16.8	8.4	-	-	5.36	97150310	DR1C1-SS	49
TEFC	3600	1	115/230	3/4	1.15	10.8	5.4	-	-	4.70	97151305	DR1C05-SS-SE	52
				1	1.15	13.8	6.9	-	-	5.00	97151307	DR1C07-SS-SE	54
				1-1/2	1.15	18.4	9.2	-	-	5.36	97151310	DR1C1-SS-SE	63
		3	230/460	3/4	1.15	-	2.6	1.3	-	4.70	97154305	DR1C05-SS-TE	53
				1	1.15	-	3.2	1.6	-	5.00	97154307	DR1C07-SS-TE	56
				1-1/2	1.15	-	5.2	2.6	-	5.36	97154310	DR1C1-SS-TE	60
		3	575	3/4	1.15	-	-	-	0.8	4.70	97155305	DR1C05-SS-T5E	53
				1	1.15	-	-	-	1.3	5.00	97155307	DR1C07-SS-T5E	56
				1-1/2	1.15	-	-	-	1.9	5.36	97155310	DR1C1-SS-T5E	60

Volute	SS	Stainless steel
Impeller	SS	Stainless steel
Mechanical Seal Types	2	GL-SiC x GL-SiC x FKM x SS
Motor Confugurations	56C	Round flange - keyed shaft, impeller mounts to shaft coupling with 1/2" threads

CENTRIFUGAL PUMPS

CLOSE-COUPLED DR SERIES

MENU

PERFORMANCE

DR1J-CS

PEI_{CL} Number
0.91

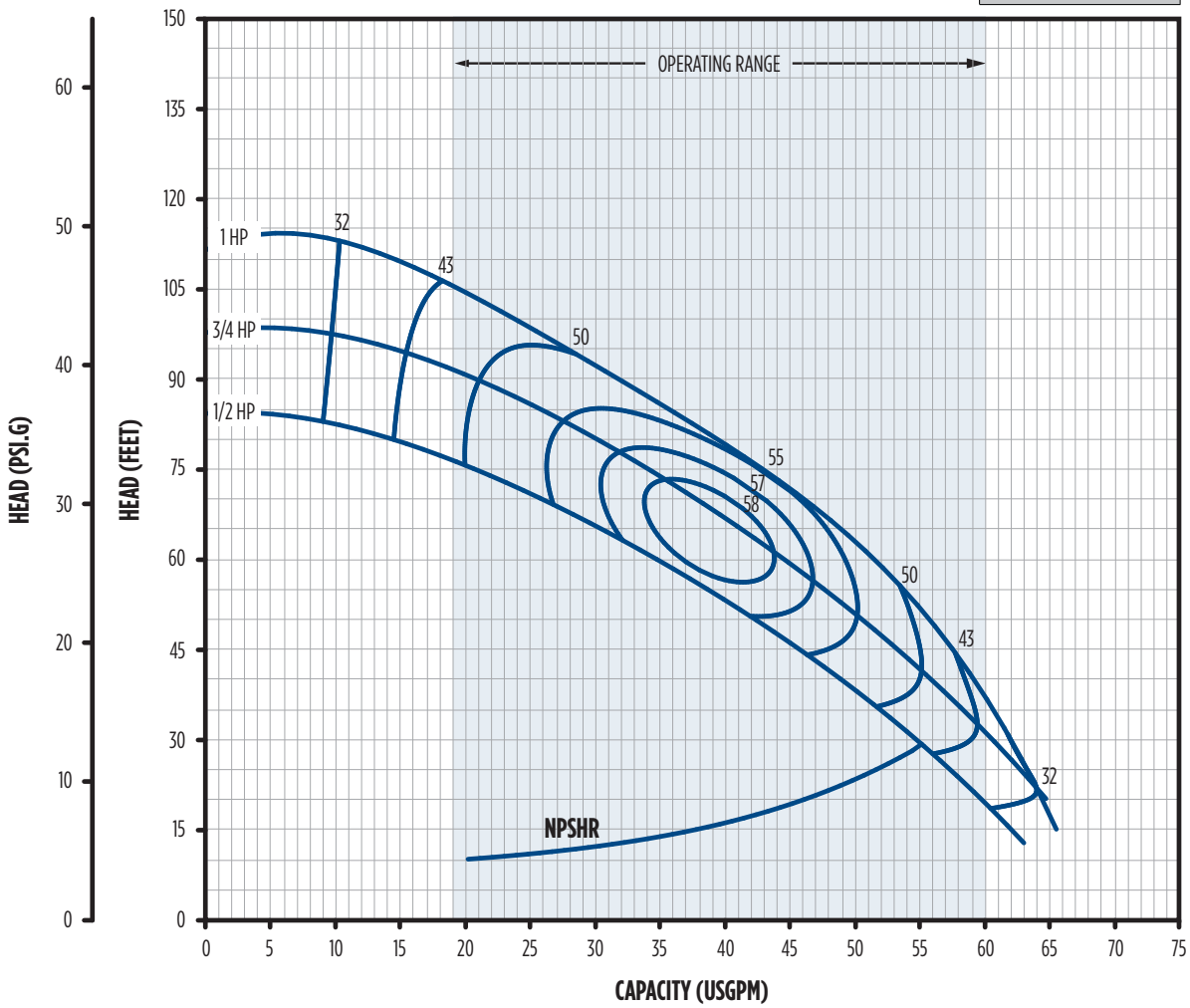

DR1J-CS	HP	PEI	Volute	Impeller	Seal Type	Fluid Max °F	Capacity in GPM at Total Feet of Head Indicated										Max (PSI)
							30	40	50	60	70	80	90	100	110	120	
DR1J05-CS	1/2	1.00	CI	SS	2	160	54.7	48.8	42.2	34.8	25.9	-	-	-	-	-	36.5
DR1J07-CS	3/4	1.00	CI	SS	2	160	60.4	55.7	50.5	44.8	38.2	30.4	20.0	-	-	-	42.4
DR1J1-CS	1	1.00	CI	SS	2	160	-	58.3	54.3	50.0	45.2	39.8	33.4	25.2	-	-	48.4

Enclosure	RPM	Phase	Voltage	HP	S.F.	S.F. Amps			Imp. Dia.	Order No.	Model No.	Wt. (lbs)
						115	230	460				
ODP	3600	1	115/230	1/2	1.60	11.8	5.9	-	4.70	97120205	DR1J05-CS	39
				3/4	1.50	14.8	7.4	-	5.00	97120207	DR1J07-CS	41
				1	1.40	16.2	8.1	-	5.36	97120210	DR1J1-CS	44
		3	230/460	1/2	1.60	-	2.7	1.4	4.70	97123205	DR1J05-CS-T	38
				3/4	1.50	-	3.4	1.7	5.00	97123207	DR1J07-CS-T	41
				1	1.40	-	4.0	2.0	5.36	97123210	DR1J1-CS-T	44

Volute	CI	Cast Iron, ASTM-A48, Class 30, 1-1/4" x 1"
Impeller	SS	Stainless steel
Mechanical Seal Types	2	GL-SiC x GL-SiC x FKM x SS
Motor Confugurations	56J	Round flange with 7/16" threaded shaft, impeller mounts directly on motor shaft

CENTRIFUGAL PUMPS

CLOSE-COUPLED DR SERIES

MENU

PERFORMANCE

DR2S-CS

PEI_{CL} Number
0.83

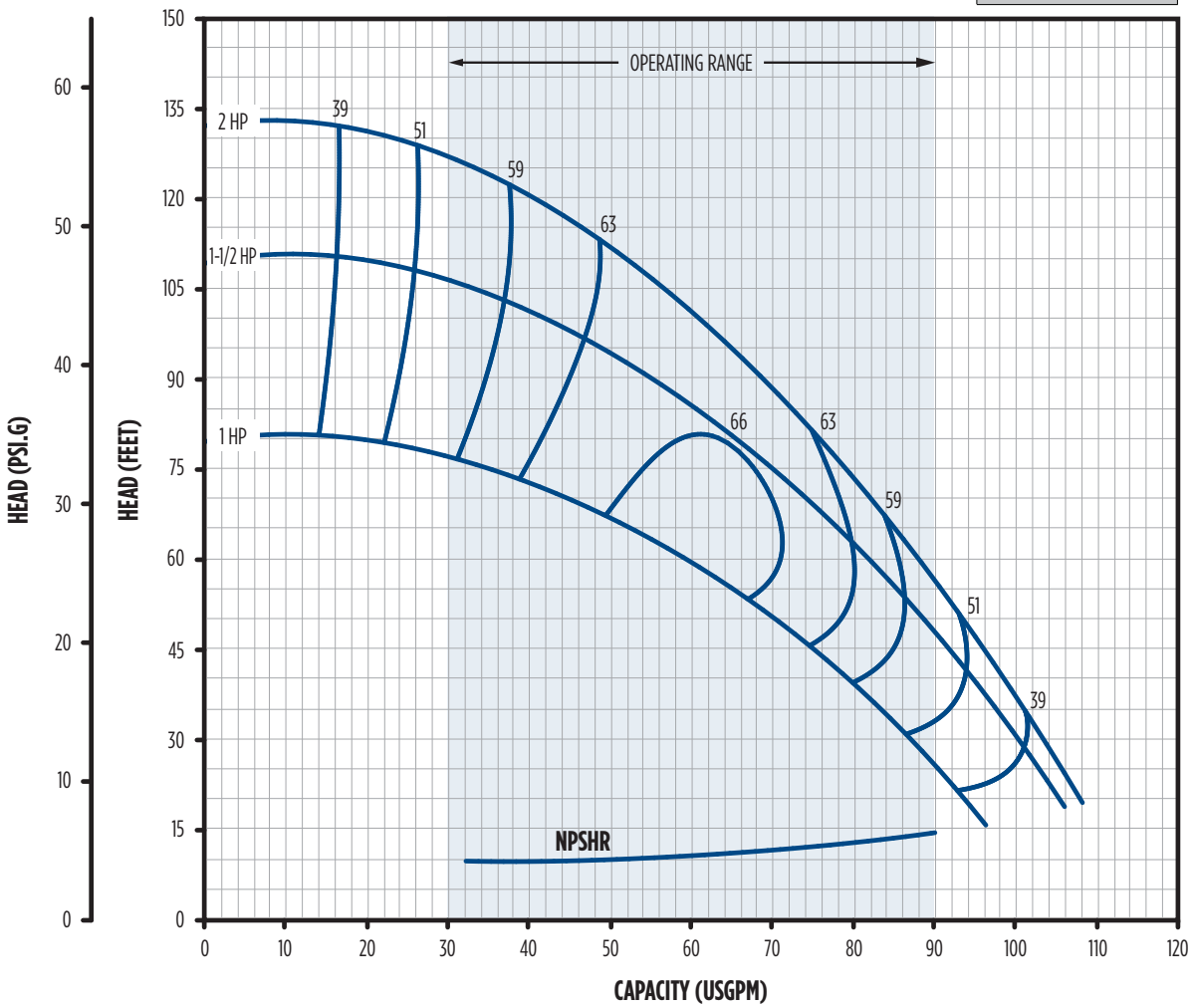

DR2S-CS	HP	PEI	Volute	Impeller	Seal Type	Fluid Max °F	Capacity in GPM at Total Feet of Head Indicated										Max (PSI)
							30	40	50	60	70	80	90	100	110	120	
DR2S1-CS	1	0.83	CI	SS	1	120	86.6	78.7	69.8	59.2	45.4	-	-	-	-	-	34.5
DR2S15-CS	1-1/2	0.83	CI	SS	1	120		94.3	88.1	81.4	73.9	65.5	55.4	42.4	-	-	47.4
DR2S2-CS	2	0.83	CI	SS	1	120	-	-	93.3	87.8	82.0	75.7	68.8	61.0	51.9	40.5	57.3

Enclosure	RPM	Phase	Voltage	HP	S.F.	S.F. Amps			Imp. Dia.	Order No.	Model No.	Wt. (lbs)
						115	230	460				
ODP	3600	1	115/230	1	1.65	19.9	9.9	-	4.56	97130210	DR2S1-CS	46
				1-1/2	1.47	24.0	12.1	-	5.25	97130215	DR2S15-CS	46
			230	2	1.30	-	11.2	-	5.75	97130220	DR2S2-CS	54
		3	230/460	1	1.65	-	4.7	2.3	4.56	97133210	DR2S1-CS-T	43
				1-1/2	1.47	-	6.8	3.3	5.25	97133215	DR2S15-CS-T	47
				2	1.30	-	8.5	4.2	5.75	97133220	DR2S2-CS-T	49

Volute	CI	Cast Iron, ASTM-A48, Class 30, 1-1/2" x 1-1/4"
Impeller	SS	Stainless Steel
Mechanical Seal Types	1	Phenolic x Ceramic x Nitrile x SS
Motor Confugurations	48Y	Square Flange with 1/2" threaded SS shaft, impeller mounts directly on motor shaft

CENTRIFUGAL PUMPS

CLOSE-COUPLED DR SERIES

MENU

PERFORMANCE

DR2C-CS

PEI_{CL} Number
0.90

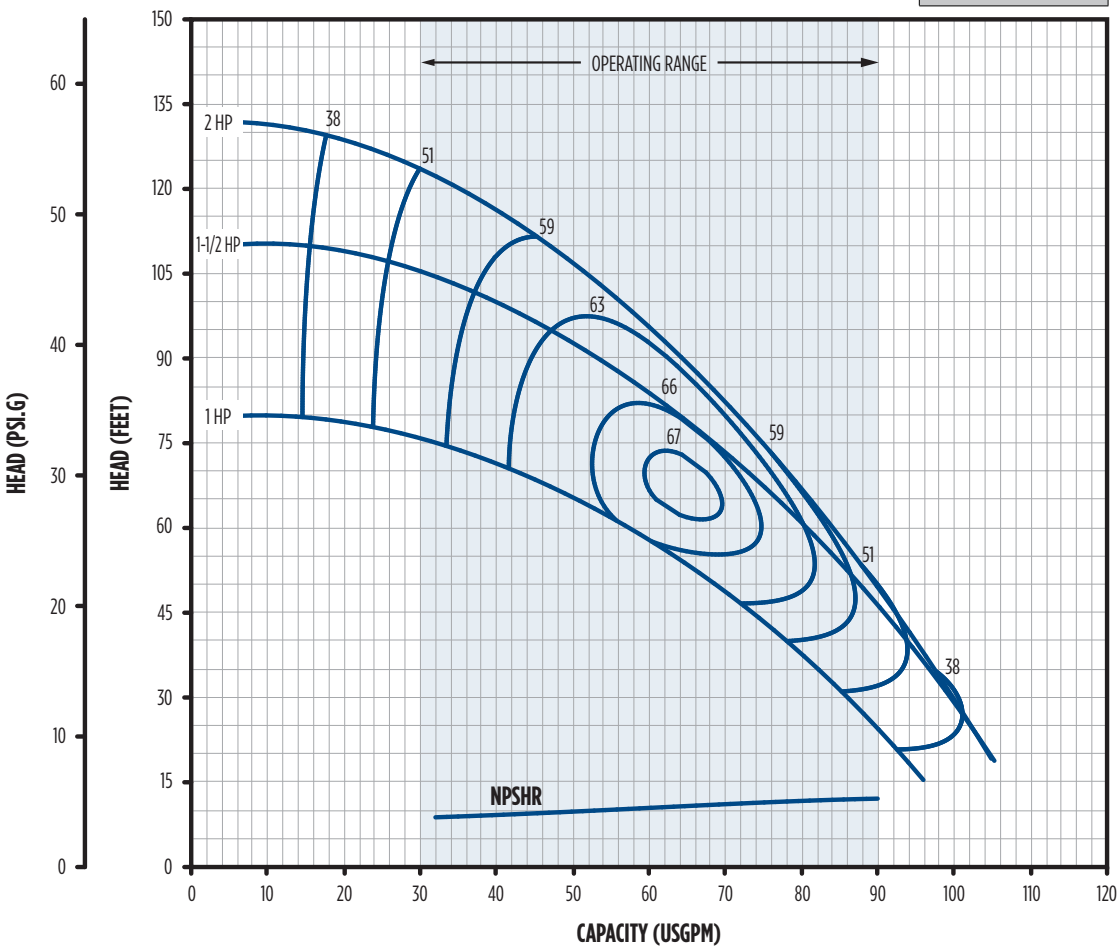

DR2C-CS	HP	PEI	Volute	Impeller	Seal Type	Fluid Max °F	Capacity in GPM at Total Feet of Head Indicated										Max (PSI)
							30	40	50	60	70	80	90	100	110	120	
DR2C1-CS	0.9	CI	SS	2	180	56C	86	78	68	57	43	-	-	-	-	-	34
DR2C15-CS	0.9	CI	SS	2	180	56C	-	93	87	80	73	64	54	40	-	-	47
DR2C2-CS	0.9	CI	SS	2	180	56C	-	-	90	84	78	72	64	56	47	35	57

Enclosure	RPM	Phase	Voltage	HP	S.F.	S.F. Amps				Imp. Dia.	Order No.	Model No.	Wt. (lbs)
						115	230	460	575				
ODP	3600	1	115/230	1	1.40	16.2	8.1	-		4.56	97160210	DR2C1-CS	46
				1-1/2	1.30	21.4	10.7	-		5.25	97160215	DR2C15-CS	55
			230	2	1.40	-	12.9	-		5.75	97160220	DR2C2-CS	54
TEFC	3600	1	115/230	1-1/2	1.25	18.4	9.2	-	-	4.56	97161210	DR2C1-CS-SE	60
			230	2	1.15	-	10.0	-	-	5.25	97161215	DR2C15-CS-SE	69
				3	1.15	-	14.6	-	-	5.75	97161220	DR2C2-CS-SE	70
		3	230/460	1-1/2	1.15	-	5.2	2.6	-	4.56	97164210	DR2C1-CS-TE	57
				2	1.15	-	6.0	3.0	-	5.25	97164215	DR2C15-CS-TE	67
				3	1.15	-	7.7	3.9	-	5.75	97164220	DR2C2-CS-TE	71
		3	575	1-1/2	1.25	-	-	-	1.9	4.56	97165210	DR2C1-CS-T5E	57
				2	1.25	-	-	-	2.4	5.25	97165215	DR2C15-CS-T5E	67
				3	1.25	-	-	-	3.6	5.75	97165220	DR2C2-CS-T5E	71

Volute	CI	Cast Iron, ASTM-A48, Class 30, 1-1/2" x 1-1/4"
Impeller	SS	Stainless Steel
Mechanical Seal Types	2	GL-SiC x GL-SiC x FKM x SS
Motor Confugurations	56C	Round flange - keyed shaft, impeller mounts to shaft coupling with 1/2" threads

CENTRIFUGAL PUMPS

CLOSE-COUPLED DR SERIES

MENU

PERFORMANCE

DR2J-CS

PEI_{CL} Number
0.93

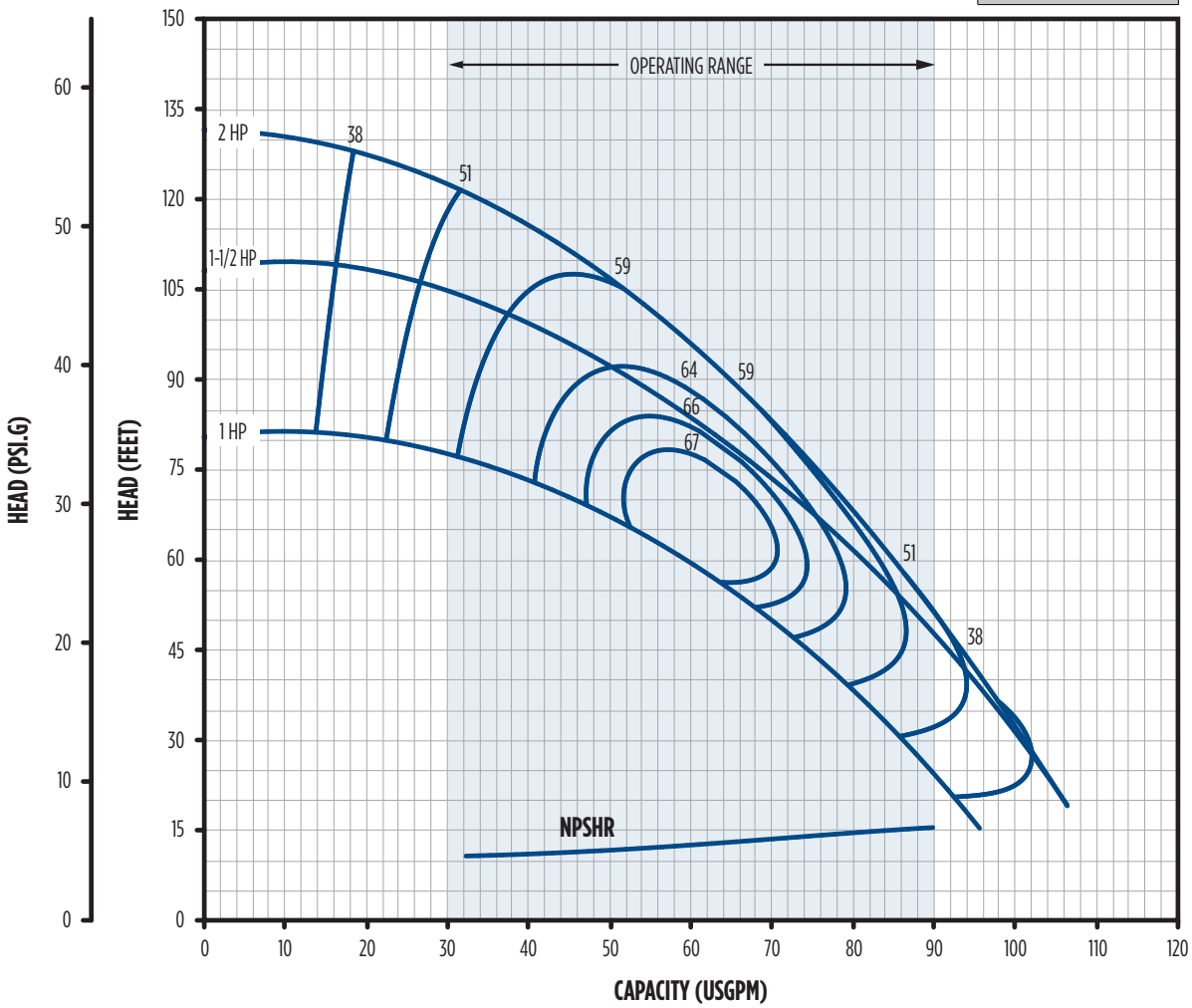

DR2J-CS	HP	PEI	Volute	Impeller	Seal Type	Fluid Max °F	Capacity in GPM at Total Feet of Head Indicated										Max (PSI)
							30	40	50	60	70	80	90	100	110	120	
DR2J1-CS	1	0.93	CI	SS	2	160	86.0	78.4	69.8	59.6	46.4	-	-	-	-	-	34.9
DR2J15-CS	1-1/2	0.93	CI	SS	2	160	-	94.9	88.3	81.1	73.1	64.1	53.3	39.3	-	-	47.0
DR2J2-CS	2	0.93	CI	SS	2	160	-	-	90.8	85.1	78.9	72.2	64.9	56.5	46.7	34.2	57.1

Enclosure	RPM	Phase	Voltage	HP	S.F.	S.F. Amps			Imp. Dia.	Order No.	Model No.	Wt. (lbs)
						115	230	460				
ODP	3600	1	115/230	1	1.40	16.2	8.1	-	4.56	97140210	DR2J1-CS	46
				1-1/2	1.30	21.4	10.7	-	5.25	97140215	DR2J15-CS	55
			230	2	1.40	-	12.9	-	5.75	97140220	DR2J2-CS	54
		3	230/460	1	1.40	-	4.0	2.0	4.56	97143210	DR2J1-CS-T	46
				1-1/2	1.30	-	6.8	3.4	5.25	97143215	DR2J15-CS-T	50
				2	1.30	-	8.5	4.2	5.75	97133220	DR2S2-CS-T	49

Volute	CI	Cast Iron, ASTM-A48, Class 30, 1-1/2" x 1-1/4"
Impeller	SS	Stainless Steel
Mechanical Seal Types	2	GL-SiC x GL-SiC x FKM x SS
Motor Confugurations	56J	Round flange with 7/16" threaded shaft, impeller mounts directly on motor shaft

MATERIALS AND PARTS

DR1S/DR2S - SQUARE FLANGE

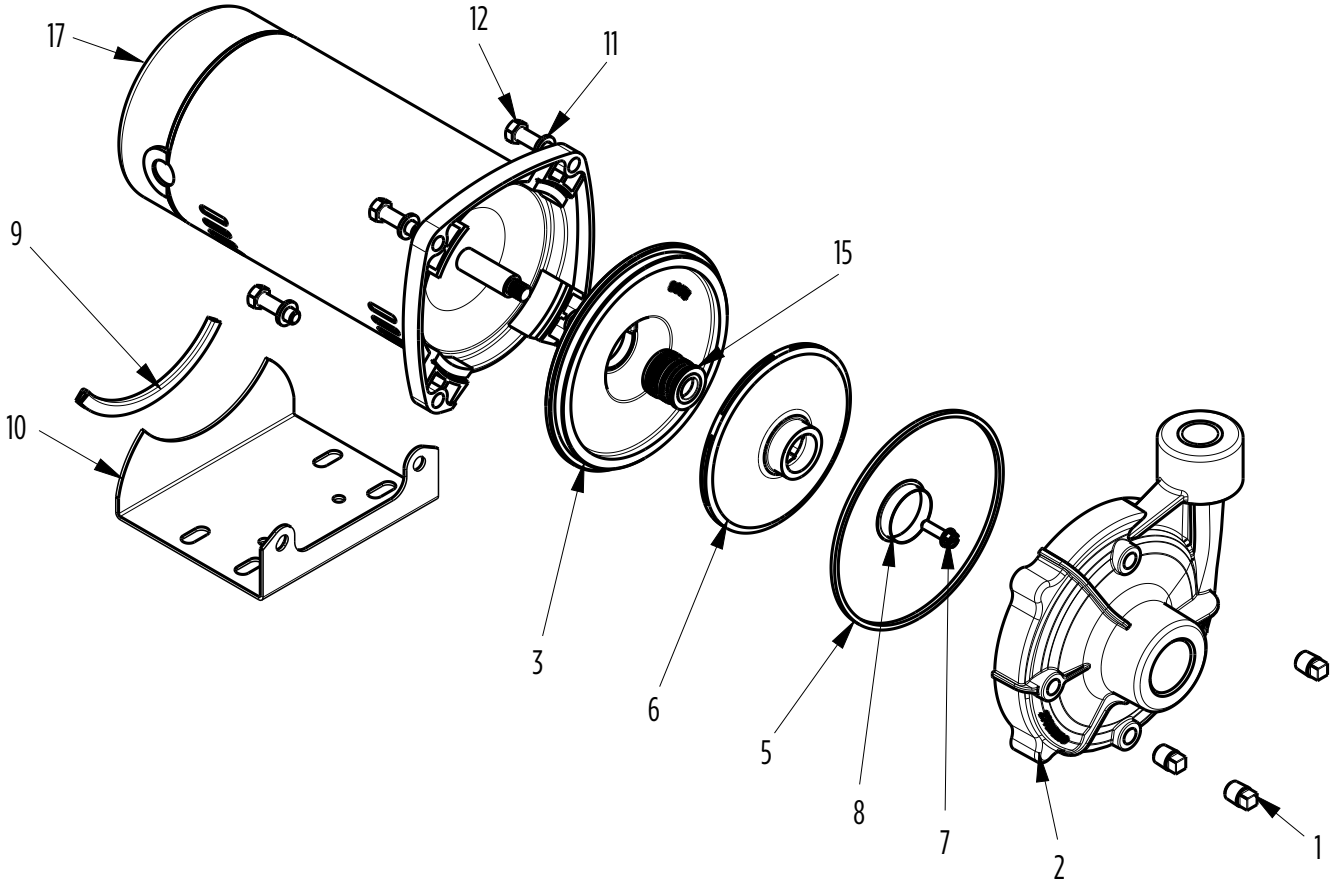

Fig. No.	Part Description	Order No.		
		DR1S-CP	DR1S-SP	DR2S-CS
1,2	Volute, Includes Pipe Plugs	305617102	305617101	305617201
3	Seal Plate	305617104	305617103	305617104
5	Volute Case Square Ring	305373907		
6,8	Impeller & Wear Ring 1/2 HP	305617106		-
6,8	Impeller & Wear Ring 3/4 HP	305617107		-
6,8	Impeller & Wear Ring 1 HP	305617108		305617202
6,8	Impeller & Wear Ring 1-1/2 HP	-	-	305617203
6,8	Impeller & Wear Ring 2 HP	-	-	305617204
7	Impeller Bolt 1/4-20-0.88 L.H. THD. 3-PH	305373910		
8	Wear Ring	305373906		305617208
9	Base Protector	305373905		
9,10	Base, Includes Protector	305373904		
1,11,12	Hardware Kit	305617001		
11	Lockwasher 3/8 " (qty. 4)	See Hardware Kit		
12	Bolt 3/8"X L.25" (qty. 4)			
15	Shaft Seal	305421907		
17	Motor (See Motor Specifications)	Square Flange		

MATERIALS AND PARTS

DR1J/DR2J - 56J FRAME

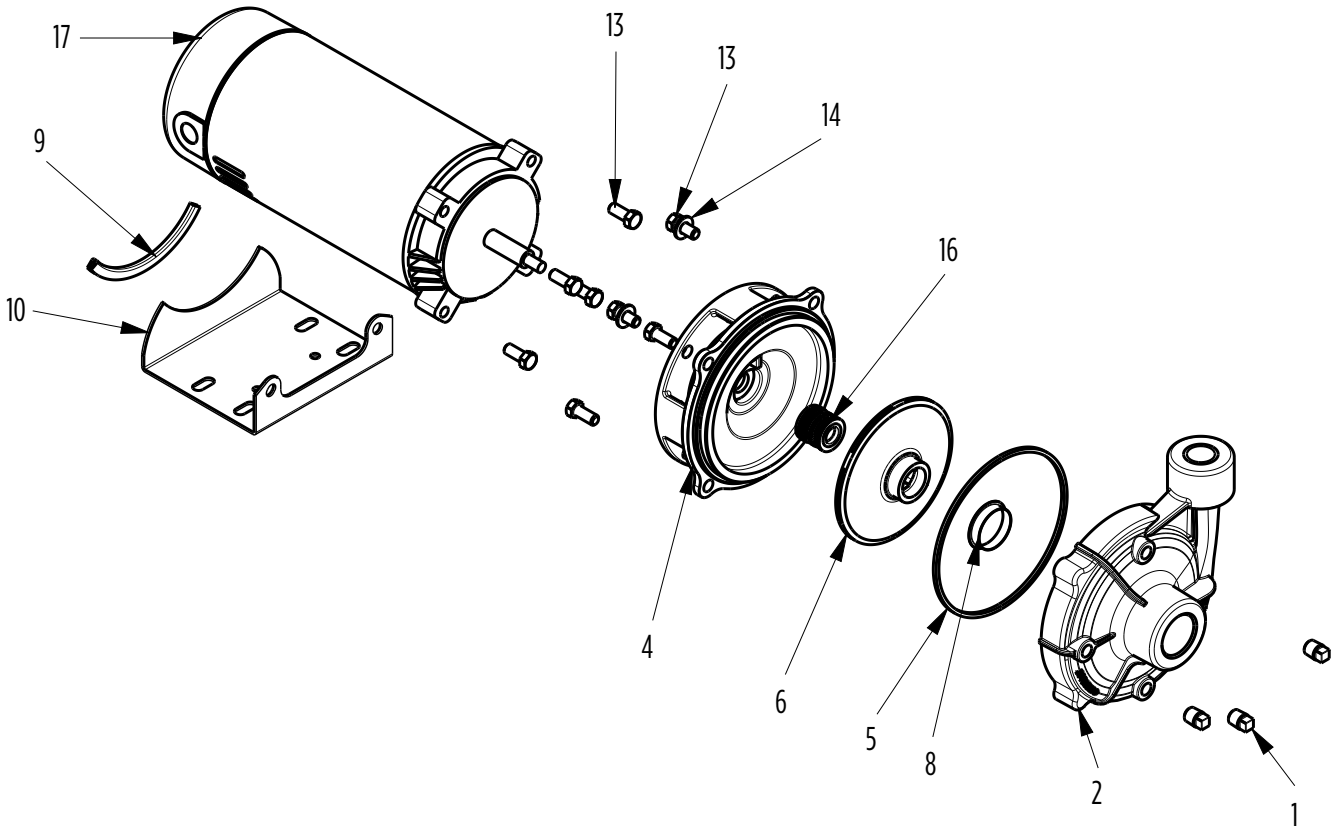

Fig. No.	Part Description	Order No.	
		DR1J-CS	DR2J-CS
1,2	Volute, Includes Pipe Plugs	305617102	305617201
4	Bracket 56J	305617105	
5	Volute Case Square Ring	305373908	
6,8	Impeller & Wear Ring 1/2 HP	305617109	-
6,8	Impeller & Wear Ring 3/4 HP	305617110	-
6,8	Impeller & Wear Ring 1 HP	305617111	305617205
6,8	Impeller & Wear Ring 1-1/2 HP	-	305617206
6,8	Impeller & Wear Ring 2 HP	-	305617207
8	Wear Ring	305373906	305617208
9	Base Protector	305373905	
9,10	Base, Includes Protector	305373904	
1,13,14	Hardware Kit	305617002	
13	Bolt 3/8" x 0.88" (qty. 8)	See Hardware Kit	
14	Washer 3/8" (qty. 2)		
16	Shaft Seal	305421004	
17	Motor (See Motor Specifications)	56J	

MATERIALS AND PARTS

DR1C/DR2C - 56C FRAME

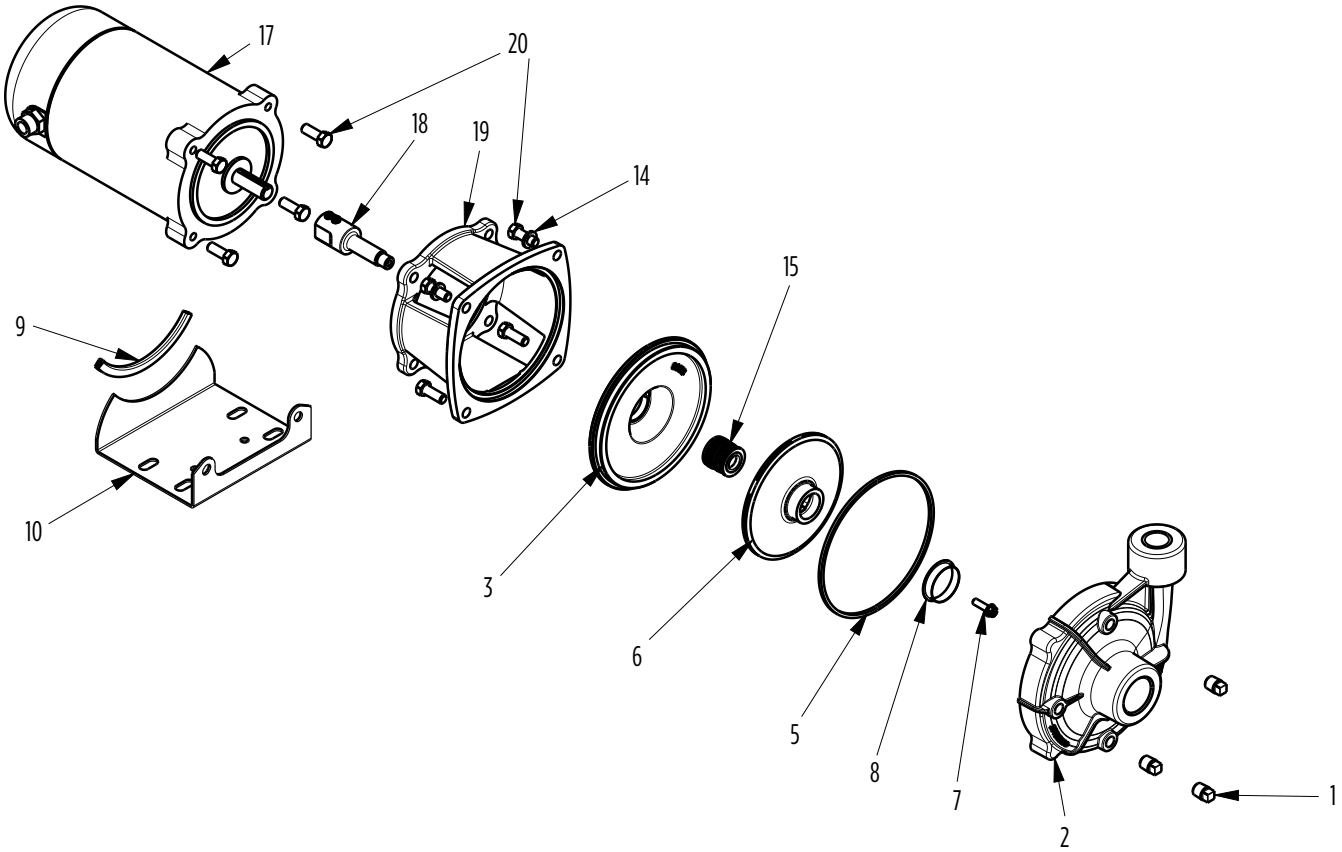

Fig. No.	Part Description	Order No.		
		DR1C-SS	DR1C-CP	DR2C-CS
1, 2	Volute, Includes Pipe Plugs	305617101	305617102	305617201
3	Seal Plate	305617103	305617104	
5	Square Ring	305373908	305373907	305373908
6, 8	Impeller & Wear Ring 1/2 HP	305617115	305617112	-
6, 8	Impeller & Wear Ring 3/4 HP	305617116	305617113	-
6, 8	Impeller & Wear Ring 1 HP	305617117	305617114	305617202
6, 8	Impeller & Wear Ring 1-1/2 HP	-	-	305617203
6, 8	Impeller & Wear Ring 2 HP	-	-	305617204
7	Impeller Bolt 1/4-20-0.88 L.H. THD. 3-PH	305373910		
8	Wear Ring	305373906		305617208
9	Base Protector	305373905		
9, 10	Base, Includes Protector	305373904		
14, 18, 19, 20	56C/48Y Conversion Kit	305373909		
1, 14, 20	Hardware Kit	305617003		
14	Washer 3/8" (qty. 2)	See Hardware Kit		
15	Shaft Seal	305421004	305421907	305421004
17	Motor (See Motor Specifications)	56C		
18	Coupling SS (Includes Set Screws)	305373916		
19	Motor Bracket	305373915		
20	Bolt 3/8" x 1.00" (qty. 8)	See Hardware Kit		

MOTORS

3600 RPM Open Drip Proof - DR1S/DR2S							
Frame	Enclosure	Phase	HP	Volts	SF	Max or SF Amps	Motor Order No.
48Y Square Flange Thrd 1/2"	ODP	1	1/2	115/230	1.90	12.4/6.1	305374903
			3/4	115/230	1.65	14.8/7.3	305374906
			1	115/230	1.65	19.9/9.94	305374907
			1-1/2	115/230	1.47	24.0/12.1	305374909
			2	230	1.30	11.2	305446959
		3	1/2	230/460	1.90	3.1/1.4	305374954
			3/4	230/460	1.65	3.6/1.7	305374955
			1	230/460	1.65	4.7/2.34	305374956
			1-1/2	230/460	1.47	6.8/3.3	305374957
			2	230/460	1.30	8.5/4.24	305374958

3600 RPM Open Drip Proof - DR1J/DR2J							
Frame		Phase	HP	Volts	SF	Max or SF Amps	Motor Order No.
56J Round Flange Thrd 7/16"	ODP	1	1/2	115/230	1.6	11.8/5.9	305374914
			3/4	115/230	1.5	14.8/7.4	305374913
			1	115/230	1.4	16.2/8.1	305398901
			1-1/2	115/230	1.3	21.4/10.7	305398902
			2	230	1.4	12.9	305398903
		3	1/2	230/460	1.6	2.7/1.35	305374961
			3/4	230/460	1.5	3.4/1.7	305374962
			1	230/460	1.4	4.0/2.0	305398904
			1-1/2	230/460	1.3	6.8/3.4	305398905
			2	230/460	1.2	8.6/4.3	305398906

3600 RPM - DR1C/DR2C							
Frame		Phase	HP	Volts	SF	Max or SF Amps	Motor Order No.
56C Round Flange Keyed 5/8"	ODP	1	1/2	115/230	1.60	11.8/5.9	90102294R000
			3/4	115/230	1.50	14.8/7.4	90102302R000
			1	115/230	1.40	16.8/8.4	90102310R000
			1-1/2	115/230	1.30	18.4/9.1	305374964
			2	115/230	1.21	22.2/12.2	305374965
	TEFC	1	3/4	115/208-230	1.15	10.8/5.7-5.4	EC06
			1	115/208-230	1.15	13.8/7.2-6.9	EC09
			1-1/2	115/208-230	1.15	18.4/10.3-9.2	EC11
			2	208-230	1.15	11.0-10.0	EC13
			3	208-230	1.15	15.8-14.6	EC16B
		1	3/4	208-230/460	1.25	2.6/1.3	U34S1ACR
			1	208-230/460	1.25	3.6-3.2/1.6	U1P1DCR
			1-1/2	208-230/460	1.25	4.9-5.2/2.6	T32P1ACR
			2	208-230/460	1.15	7.1-6.0/3.0	T2P1ACR
			3	208-230/460	1.15	7.7/3.9	T3P1ACR
		3	3/4	575	1.25	0.8	U34P1GCR
			1	575	1.25	1.3	U1P1GCR
			1-1/2	575	1.25	1.9	U32P1GFCR
			2	575	1.25	2.4	U2P1GFCR
			3	575	1.25	3.6	U3P1GFCR

DIMENSIONS

DR1S SQUARE FLANGE

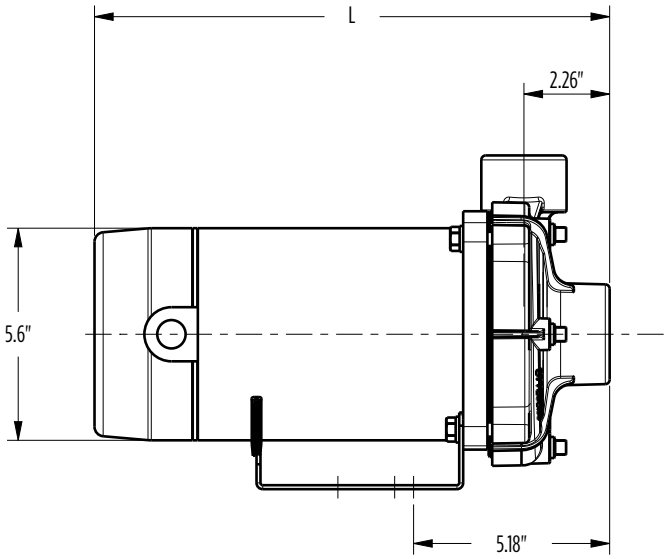

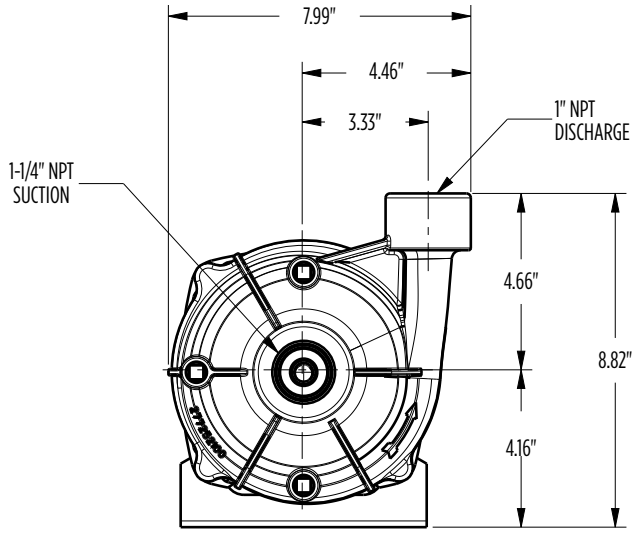

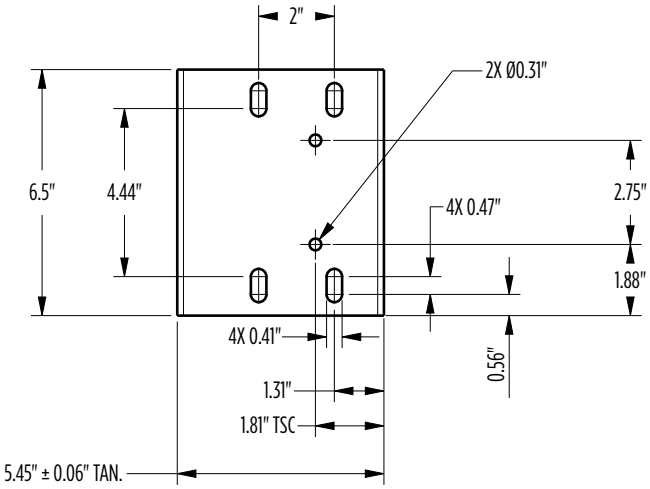

Model	HP	PH	L (in)	Suction	Discharge	Drain Ports (3)
DR1S05	1/2	1	13.61	1-1/4" NPT	1" NPT	1/4"
DR1S07	3/4		14.23			
DR1S1	1		15.11			
DR1S05	1/2	3	13.08			
DR1S07	3/4		13.73			
DR1S1	1		14.08			

DIMENSIONS

DR1C 56C FRAME

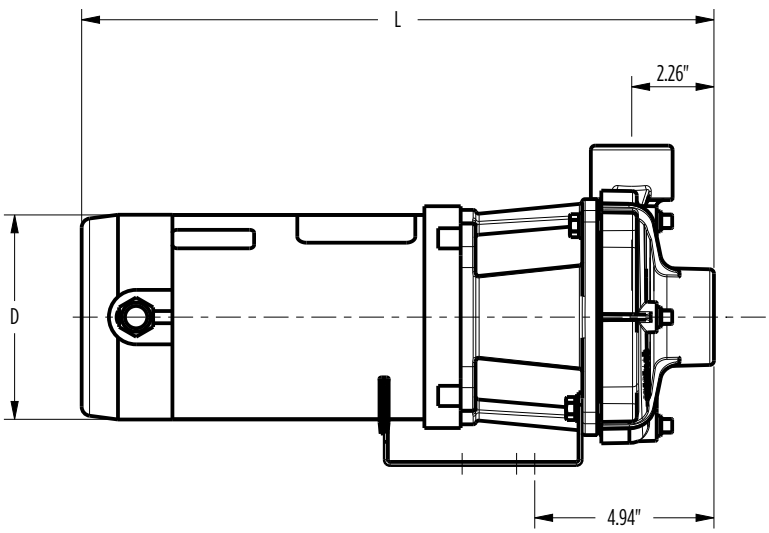

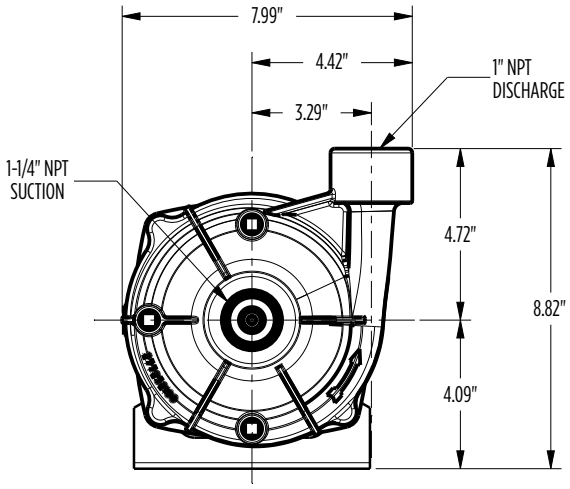

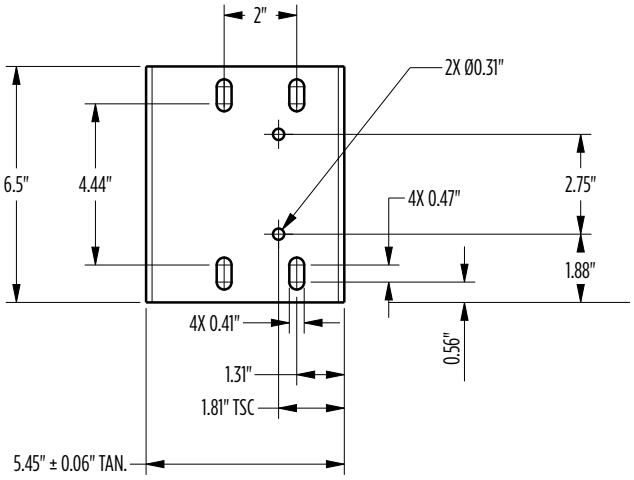

Model	HP	PH	Enslosure	L (in)	D (in)	Suction	Discharge	Drain Ports (3)
DR1C05	1/2	1	ODP	17.42	5.63	1-1/4" NPT	1" NPT	1/4"
DR1C07	3/4			17.82				
DR1C1	1			18.42				
DR1C05	3/4	1	TEFC	16.77	7.31	1-1/4" NPT	1" NPT	1/4"
DR1C07	1			17.02				
DR1C1	1-1/2			17.52				
DR1C05	3/4	3	TEFC	15.73	7.31	1-1/4" NPT	1" NPT	1/4"
DR1C07	1			17.98				
DR1C1	1-1/2			17.23				
DR1C05	3/4	3 - 575v	TEFC	16.98	7.31	1-1/4" NPT	1" NPT	1/4"
DR1C07	1			17.98				
DR1C1	1-1/2			17.98				

DIMENSIONS

DR1J 56J FRAME

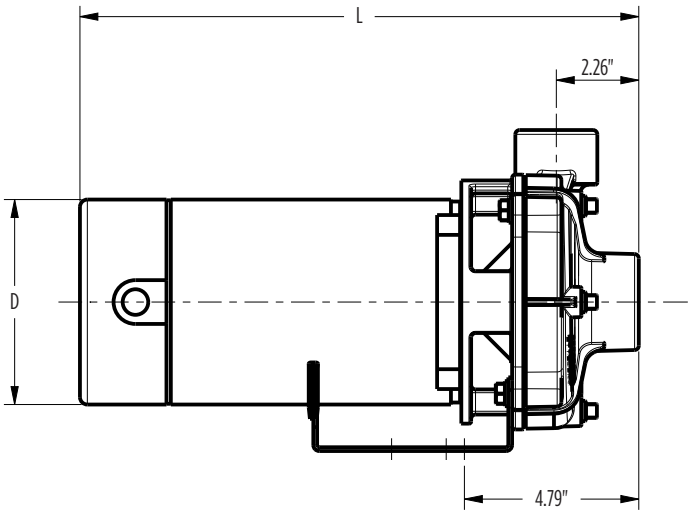

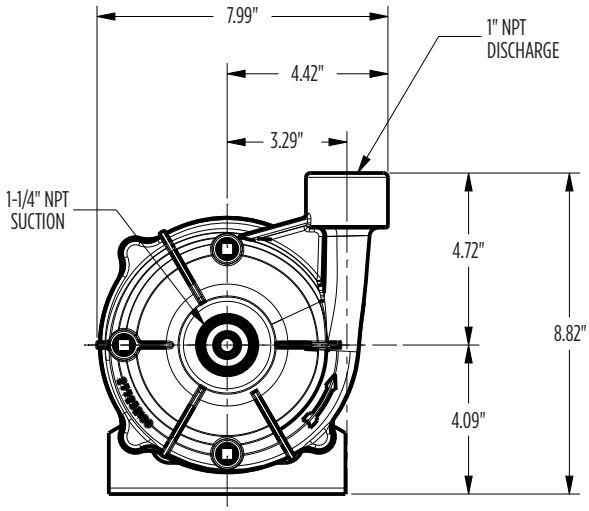

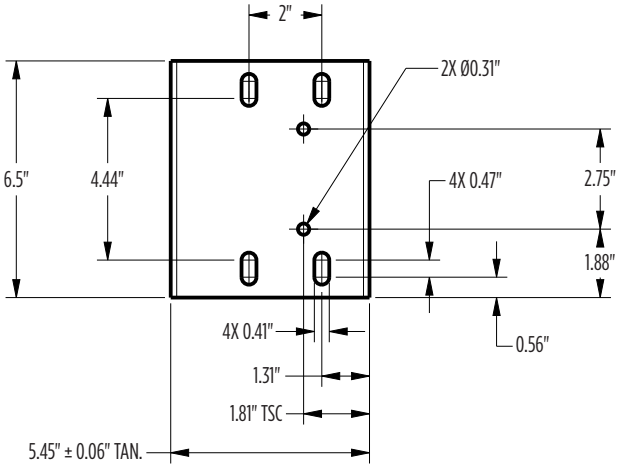

Model	HP	PH	L (in)	D (in)	Suction	Discharge	Drain Ports (3)
DR1J05	1/2	1	15.35	5.63	1-1/4" NPT	1" NPT	1/4"
DR1J07	3/4		16.06				
DR1J1	1		16.17				
DR1J05	1/2	3	13.50	5.88			
DR1J07	3/4		14.00				
DR1J1	1		14.56				

CENTRIFUGAL PUMPS

CLOSE-COUPLED DR SERIES

MENU

DIMENSIONS — DR2S SQUARE FLANGE

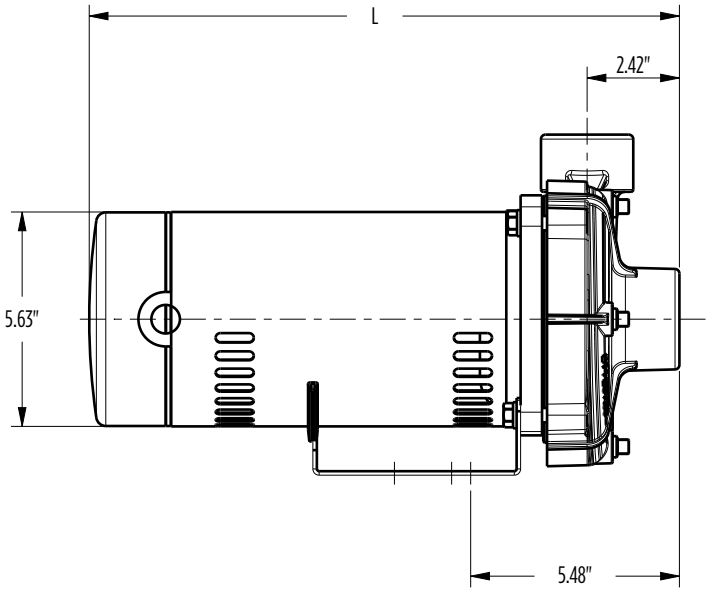

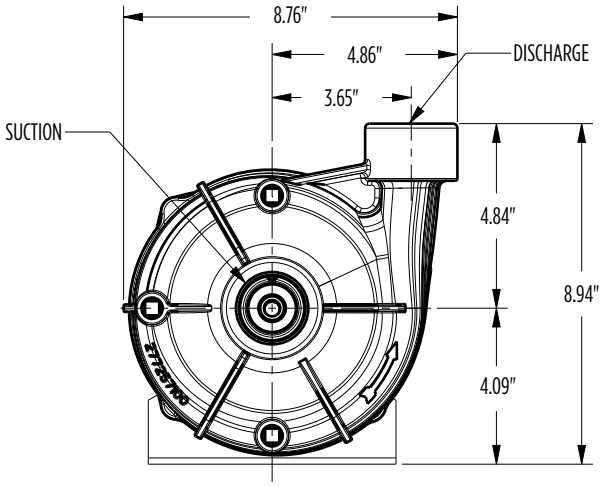

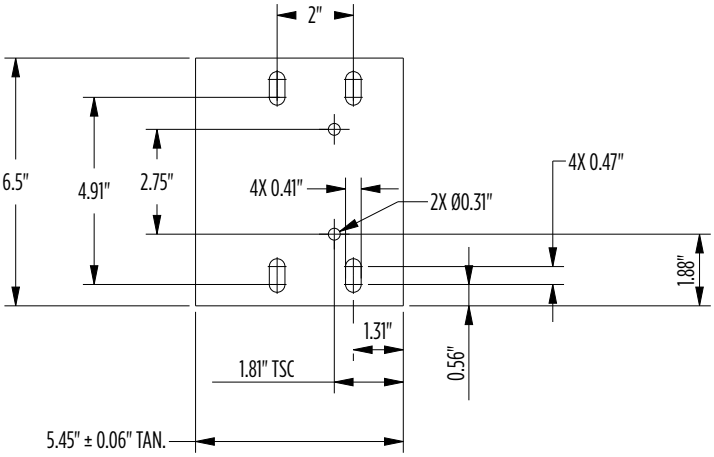

Model	HP	PH	L (in)	Suction	Discharge	Drain Ports (3)
DR2S1	1	1	15.48	1-1/2" NPT	1-1/4" NPT	1/4"
DR2S15	1-1/2		16.23			
DR2S2	2		17.45			
DR2S1	1	3	14.45			
DR2S15	1-1/2		15.45			
DR2S2	2		16.20			

CENTRIFUGAL PUMPS

CLOSE-COUPLED DR SERIES

MENU

DIMENSIONS

DR2C 56C FRAME

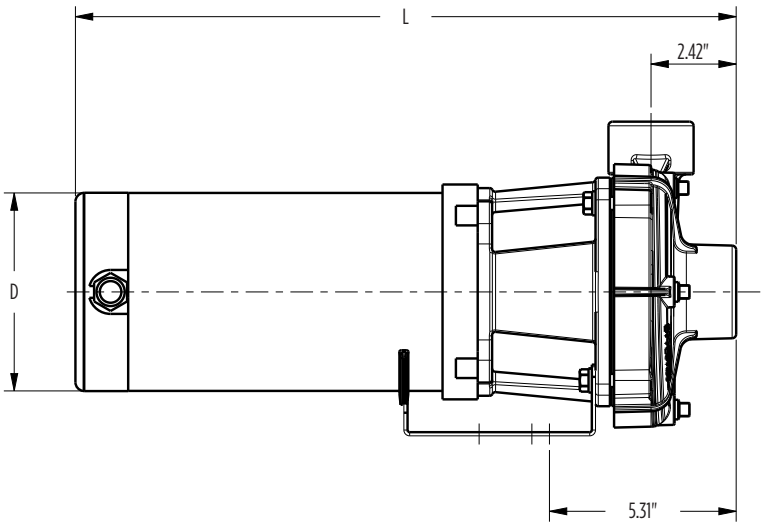

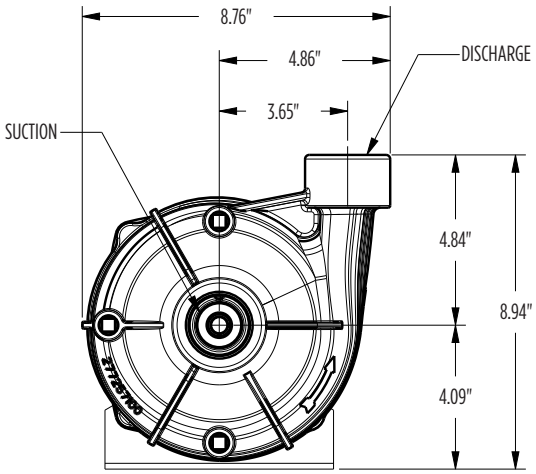

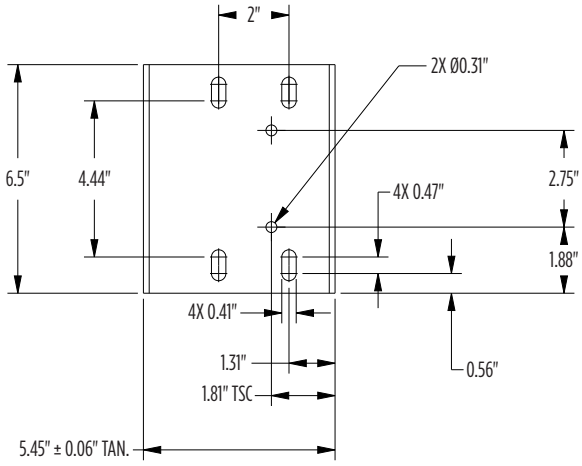

Model	HP	PH	Enclosure	L (in)	D (in)	Suction	Discharge	Drain Ports (3)
DR2C1	1	1	ODP	18.79	5.63	1-1/2" NPT	1-1/4" NPT	1/4"
DR2C15	1-1/2			19.29				
DR2C2	2			17.66	6.5			
DR2C1	1-1/2	1	TEFC	17.86	7.25	1-1/2" NPT	1-1/4" NPT	1/4"
DR2C15	2			18.14				
DR2C2	3			18.64				
DR2C1	1-1/2	3	TEFC	17.60	7.25	1-1/2" NPT	1-1/4" NPT	1/4"
DR2C15	2			18.85				
DR2C2	3			19.35				
DR2C1	1-1/2	3 - 575V	TEFC	18.35	7.25	1-1/2" NPT	1-1/4" NPT	1/4"
DR2C15	2			18.35				
DR2C2	3			18.35				

DIMENSIONS

DR2J 56J FRAME

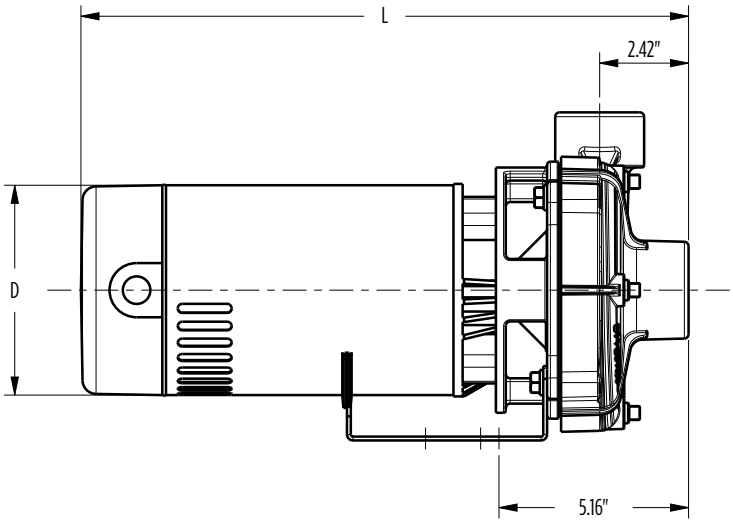

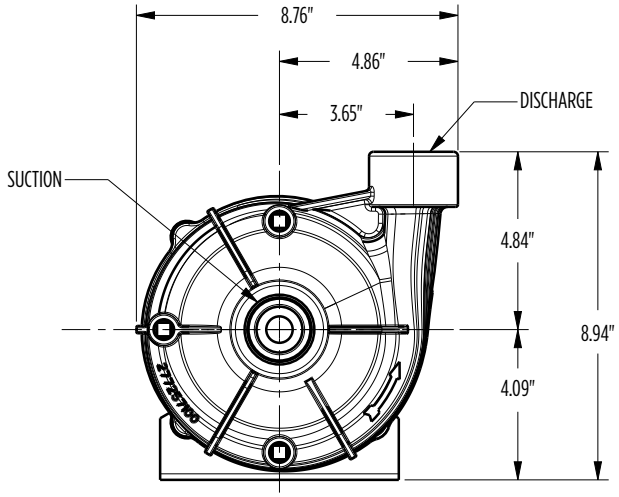

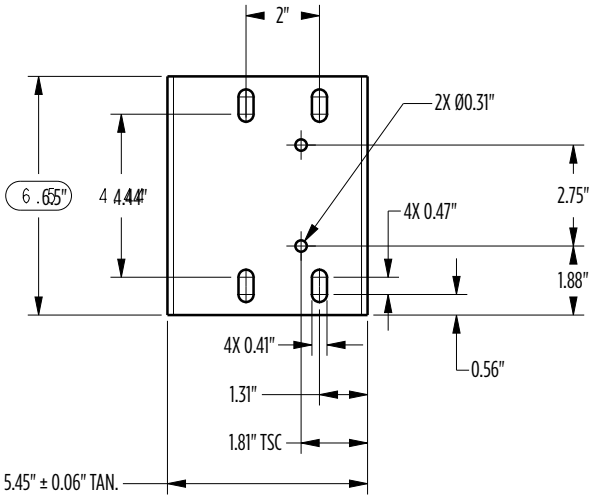

Model	HP	PH	L (in)	D (in)	Suction	Discharge	Drain Ports (3)
DR2J1	1	1	16.55	5.63	1-1/2" NPT	1-1/4" NPT	1/4"
DR2J15	1-1/2		18.15				
DR2J2	2		18.15				
DR2J1	1	3	14.94				
DR2J15	1-1/2		16.56				
DR2J2	2		16.56				

CENTRIFUGAL PUMPS

CLOSE-COUPLED DR SERIES

MENU

PUMP END KITS — 56J ROUND FLANGE, THREADED SHAFT

Pump Series	Volute/Impeller	Motor	HP	Impeller Trim (in)	Order No.	Description	Wt. (lbs)
DR1J-CS	C.I./S.S.	56J	1/2	4.7	9712K205	DR1J05-CS-K	20
			3/4	5.00	9712K207	DR1J07-CS-K	20
			1	5.36	9712K210	DR1J1-CS-K	20
DR2J-CS	C.I./S.S.	56J	1	4.56	9714K210	DR2J1-CS-K	24
			1-1/2	5.25	9714K215	DR2J15-CS-K	24
			2	5.75	9714K220	DR2J2-CS-K	24

PUMP END KITS — 56C ROUND FLANGE, KEYED SHAFT

Pump Series	Volute/Impeller	Motor	HP	Impeller Trim (in)	Order No.	Description	Wt. (lbs)
DR1C-SS	S.S./S.S.	56C	1/2	4.7	9715K305	DR1C05-SS-K	23
			3/4	5.00	9715K307	DR1C07-SS-K	23
			1	5.36	9715K310	DR1C1-SS-K	23
DR1C-CP	C.I./Plastic	56C	1/2	4.7	9715K005	DR1C05-CP-K	22
			3/4	5.00	9715K007	DR1C07-CP-K	22
			1	5.36	9715K010	DR1C1-CP-K	22
DR2C-CS	C.I./S.S.	56C	1	4.56	9716K210	DR2C1-CS-K	25
			1-1/2	5.25	9716K215	DR2C15-CS-K	25
			2	5.75	9716K220	DR2C2-CS-K	25

If you purchase a pump end kit without a factory supplied motor, you are responsible for ensuring that the motor driver has a sufficient horsepower and service factor rating to adequately handle the pump horrsepower load across the spectrum of the operating curve.